Trade of Sheet Metalwork	
Module 1:	**Sheetmetal Fundamentals**
Unit 13:	**Chain Guard**
	Phase 2

Table of Contents

List of Figures **4**

List of Tables **4**

Document Release History **5**

Module 1 – Sheetmetal Fundamentals **6**

Unit 13 – Chain Guard 6
Learning Outcome: 6
Key Learning Points: 6
Training Resources: 7
Exercise: 7
Key Learning Points Code: 7

Assembly of Guard **9**

Sequence of Operations **9**

Self Assessment **10**

Answers to Questions 1-4. Module 1.Unit 13 ..... **12**

Index **14**

List of Figures

Figure 1 - Chain Guard 8
Figure 2 - Chain Guard 9

List of Tables

Document Release History

Date	Version	Comments
12/07/06	First draft	
04/03/14	2.0	SOLAS transfer

Module 1 – Sheetmetal Fundamentals

Unit 13 – Chain Guard

Duration – 10 Hours

Learning Outcome:

By the end of this unit each apprentice will be able to:

- Read and interpret drawing for chain guard
- Mark out/develop, cut, form and assemble guard/weld guard
- Describe method of manufacture and production sequence

Key Learning Points:

D Sk	Layout and development of guard.
Sk	Cut using guillotine, snips, jigsaw.
Sk	Remove cutouts using drilled holes, jigsaw and file.
Sk	Deburr edges using file/sanding machine.
Rk Sk	Forming/bending - correct bend sequence, use of templates.
Rk H	Assembly/welding - close tacking of joints, no gaps, planishing of welds no distortion and good appearance, weld symbols.
P	Job planning/sequence of operations/job card.
Rk	Method of manufacture/type of construction.
M	Calculation of bend allowances.

Training Resources:

- Toolkit
- Tools/machinery and equipment
- Oxy-acetylene welding equipment
- 1.2 mm mild steel
- Workshop drawing 2.1.12
- Job card

Exercise:

Exercise 2.1.12 – see Figure 1.

Key Learning Points Code:

M = Maths D= Drawing RK = Related Knowledge Sc = Science
P = Personal Skills Sk = Skill H = Hazards

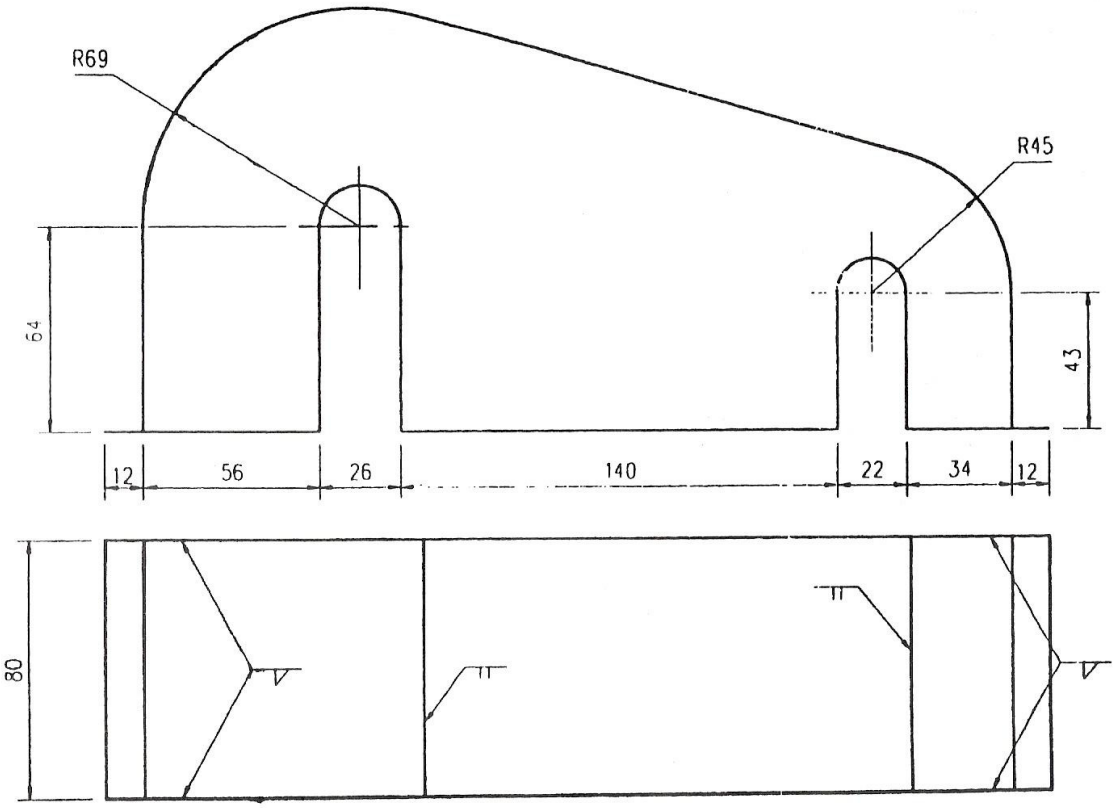

Figure 1 - Chain Guard

Assembly of Guard

The guard is made in three sections. The two sides and top – welded or riveted together. The welding is a much neater job. If riveting the guard, place rivet allowance on the sides. Where the curves are there is no allowance. We must notch out the metal.

Appearance is important so all burrs and distortions should be removed. Neat welding is important. Care is needed to obtain circumference of top. The simple method of wrapping the tape around sides is sufficient. Calculations would take too long as the curved parts are not strictly quarter circles.

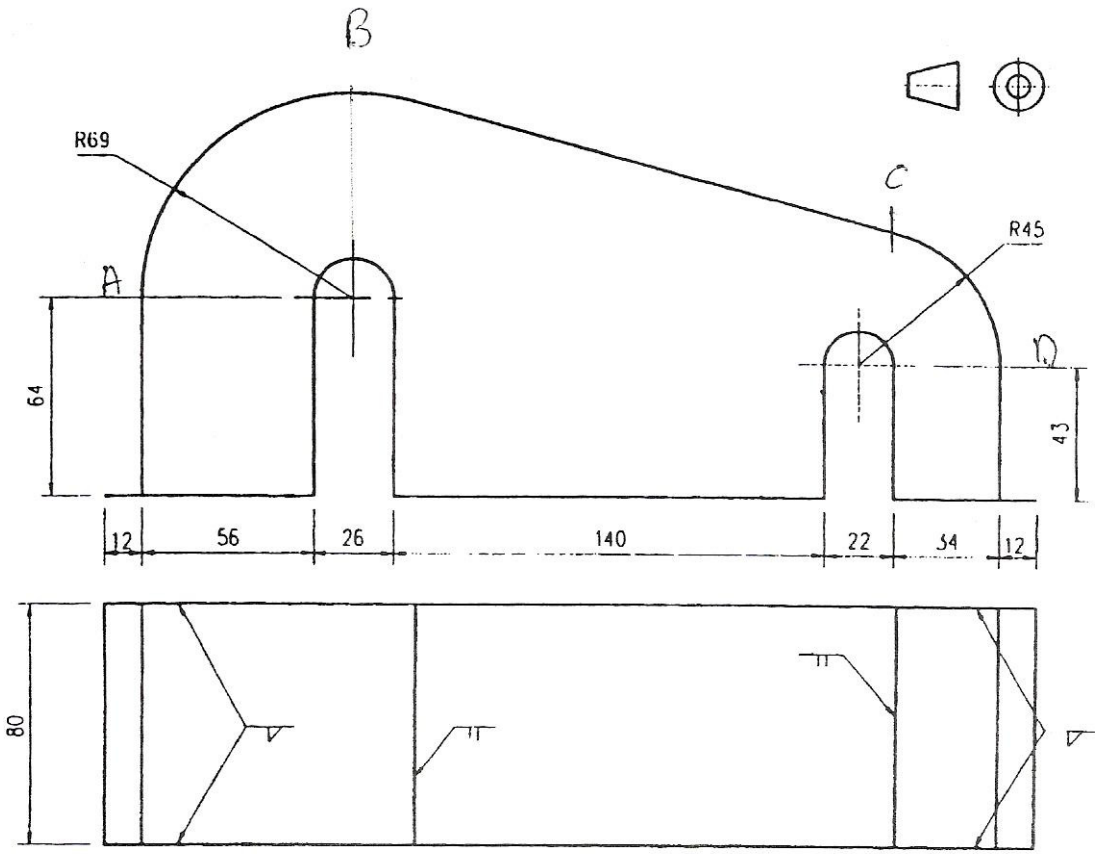

Figure 2 - Chain Guard

Sequence of Operations

1. Mark out and fabricate one of the sides.
2. Use side as a template to mark out the second side.
3. Bend the 12mm edge on the wrap-around and shape AB and CD to suit sides.
4. When sides and wrap-around are close fitting tack the weld in position.
5. Try to avoid using filler rod. Keep heat during welding to a minimum to avoid distortion. Penetration is not important on this job. Appearance is to keep welds neat.
6. The top wrap-around may be made in 3 sections or 1.

Self Assessment

Questions on Background Notes – Module 1.Unit 13

1. What is the circumference of a pipe 200mm in diameter?

2. Find the circumference of a pipe 150mm radius.

3. Explain what is meant by the expression ‘Breaking the Grain’ and ‘Pre-forming’.

4. What is the maximum S.W.G you would use in/on a Jenny?

Answers to Questions 1-4. Module 1.Unit 13

1.

$\pi D = 3.142 \times 400 = 125.8mm$

2.

$\pi D = 3.142 \times 300 = 942.6$

3.

Breaking the Grain:
Metal has a grain like wood running in one direction only and if we work against the grain the metal obtains ridges. We roll the metal upwards and then reversing the procedure. We do this a few times to make the metal easier to round up.

Pre-Forming:
Pre-forming is putting a curve (small) at both ends of the piece of metal about to be rolled. This helps prevent flats at the joints and improves the shape of the cylinder fabricated.

4.

18 S.W.G

Index

A

Assembly of Guard, 10

S

Sequence of Operations, 10